Matrix model, supersymmetirc gauge theory, and discrete Painlevé equation

Takeshi Oota (NITEP and OCAMI)

December 13, 2018

International Symposium in Honor of Professor Nambu for the 10th Anniversary of his Nobel Prize in Physics,

Media Center, Osaka City Univeristy

Joint work with Hiroshi Itoyama and Katsuya Yano
Ref: arXiv: 1805.05057, arXiv:1812.00811

Introduction

• The correspondence between (large N) matrix models and gauge theories has been known for long time and investigated from various viewpoints.

AGT relation [Alday-Gaiotto-Tachikawa, 2009]

2d conformal blocks $=$ Nekrasov partition function of $\mathcal{N} = 2$ supersymmetric gauge theories

$\Longrightarrow$ Refined correspondence between (finite N) matrix models and ($\mathcal{N} = 2$) gauge theories

[Example] (β-deformed) matrix model having the potential with three logarithmic terms $\longleftrightarrow$ $\mathcal{N} = 2$ $SU(2)$ with $N_f = 4$

• (Motivation) Renewed interest in Painlevé/Gauge correspondence

• We concentrate on one of irregular limits to $N_f = 2$

Painlevé/Gauge correspondence

Painlevé equations

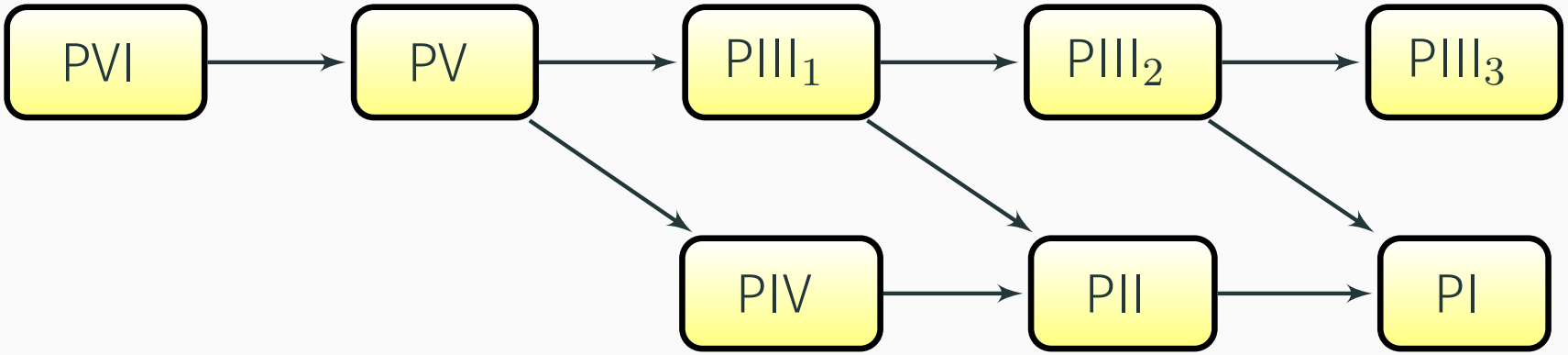

$\mathcal{N} = 2$ supersymmetric $SU(2)$ gauge theories with N_f flavors

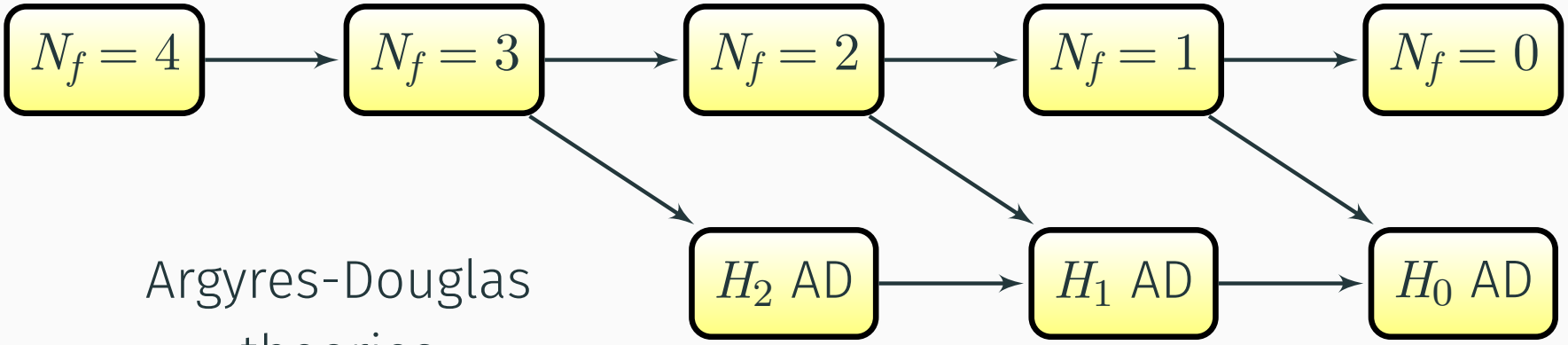

Argyres-Douglas theories

[Kajiwara-Masuda-Noumi-Ohta-Yamada, nlin/0403009]

[Bonelli-Lisovyy-Maruyoshi-Sciarappa-Tanzini, 1612.06235 [hep-th]]

[Dzhamay-Takenawa, 1408.3778 [math-ph]]

Painlevé and associated discrete Painlevé (dP) (alt=alternate)

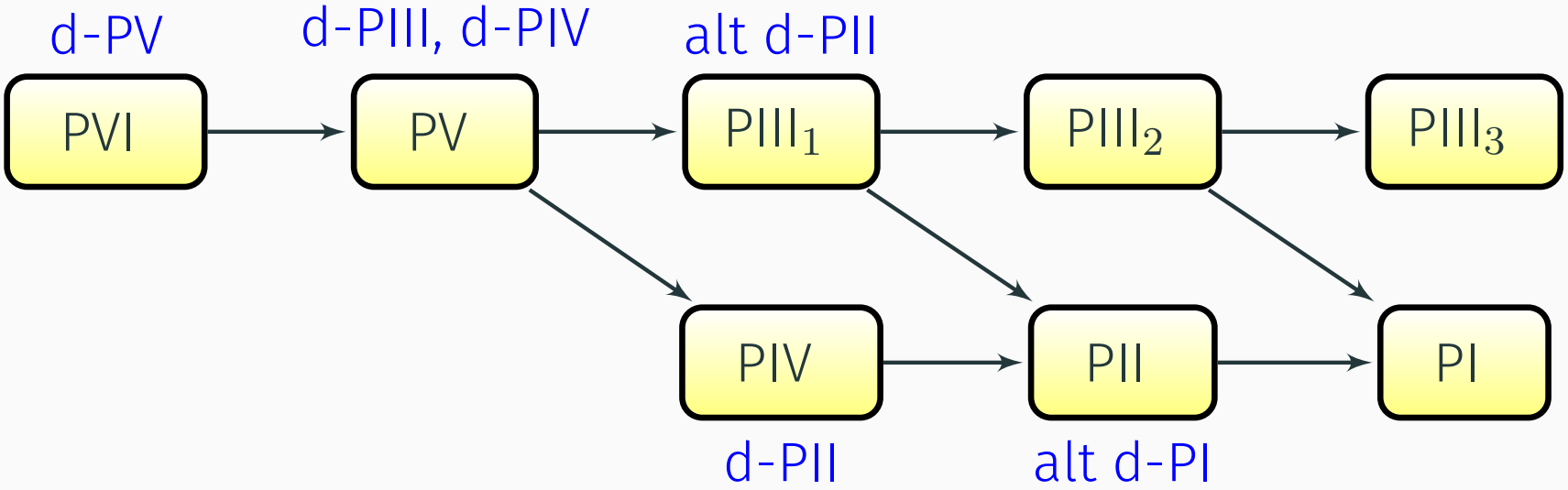

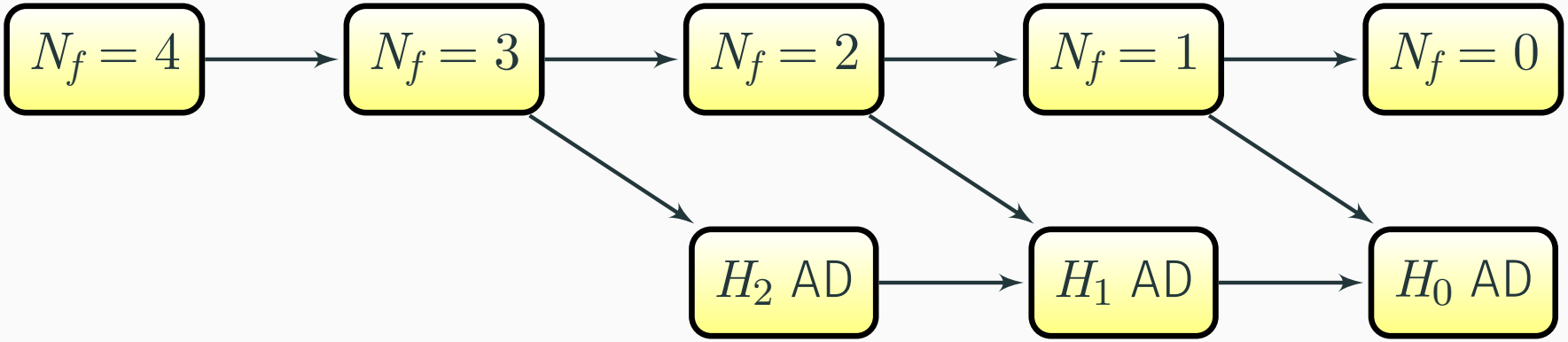

In this talk, we concentrate on

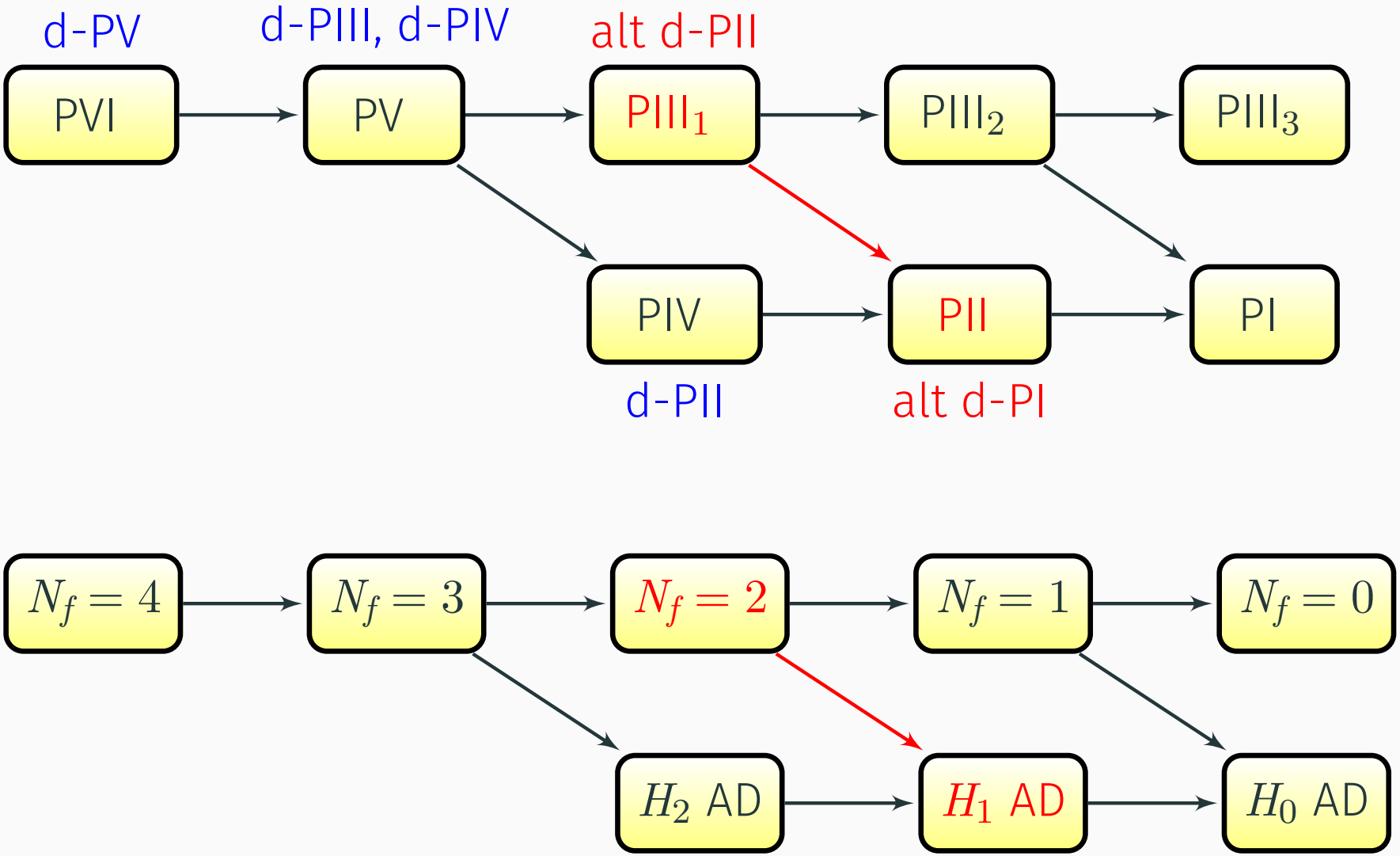

from the viewpoint of matrix models.

Unitary matrix model

Generalized Gross-Witten-Wadia model

Let us consider the following unitary matrix model

$$Z_{U(N)}(M) := \frac{1}{\mathrm{vol}(U(N))} \int [\mathrm{d}\,U] \, \exp\Big(\mathrm{Tr}\; W_U(U)\Big),$$

where U is an $N \times N$ unitary matrix model, with the potential

$$W_U(z) = -\frac{1}{2g}\left(z + \frac{1}{z}\right) + M \log z, \qquad (M \in \mathbb{Z}).$$

This reduces to multiple integrals over eigenvalues

$$Z_{U(N)} = \frac{1}{N!}\left(\prod_{i=1}^{N} \oint \frac{\mathrm{d}z_i}{2\pi \mathrm{i}\, z_i}\right) \Delta(z)\Delta(z^{-1}) \exp\left(\sum_{i=1}^{N} W_U(z_i)\right),$$

$$\Delta(z) = \prod_{1 \le i < j \le N} (z_i - z_j), \qquad \Delta(z^{-1}) = \prod_{1 \le i < j \le N} (z_i^{-1} - z_j^{-1}).$$

Properties

(1) When $M = 0$, this is the famous Gross-Witten-Wadia (GWW) model. In the large N, this model exhibits the third order phase transition at $S = 1$ where $S := Ng$.

(2) For $M \neq 0$ with M finite, the generalized GWW model also exhibits the third order phase transition at $S = 1$ in the large N.

The free energy

$$\mathcal{F} = \log Z_{U(N)}(M) = \sum_{k=0}^{\infty} \mathcal{F}_k(S) g^{2k-2},$$

where the planar contribution is

$$\mathcal{F}_0(S) = \begin{cases} (1/4), & (S \geq 1), \\ (1/2)S^2(\log S - (3/2)) + S, & (0 \leq S \leq 1). \end{cases}$$

$\mathcal{F}_0'''$ is discontinuous at $S = 1$.

(3) The partition function $Z_{U(N)}(M)$ is a τ-function of Painlevé III′ equation.

(4) The partition function $Z_{U(N)}(M)$ can be written as

$$Z_{U(N)}(M) = h_0^N \prod_{j=1}^{N-1} \Big(1 - A_j(M) B_j(M)\Big)^{N-j}.$$

If we set

$$X_n(M) := \frac{A_{n+1}(M)}{A_n(M)}, \qquad Y_n(M) := \frac{B_{n+1}(M)}{B_n(M)},$$

then X_n and Y_n respectively satisfies the alternate discrete Painlevé II (alt dPII) equations (with different parameters).

(5) We expect that this partition function $Z_{U(N)}(M)$ is closely related to the instanton partition function of the 4d $\mathcal{N}=2$ supersymmetric $SU(2)$ gauge theory with $N_f=2$ hypermultiplets in the self-dual Ω background via parameter identifications:

$$\frac{1}{g}=\frac{\Lambda_2}{g_s}, \qquad N=-\frac{(m_1+m_2)}{g_s}, \qquad M=\frac{(m_2-m_1)}{g_s}.$$

Here Λ_2 is dynamical mass scale and m_i are the mass of the hypermultiplets.

(Irregular limit of AGT relation).

• The planar loop equation of the matrix model can be identified with the Seiberg-Witten curve of $N_f=2$ model.

(6) In the double scaling limit, the alt dPII equation goes to the Painlevé II equation. The loop equation in the double scaling limit goes to the Seiberg-Witten curve of the Argyres-Douglas (AD) model of type H_1.

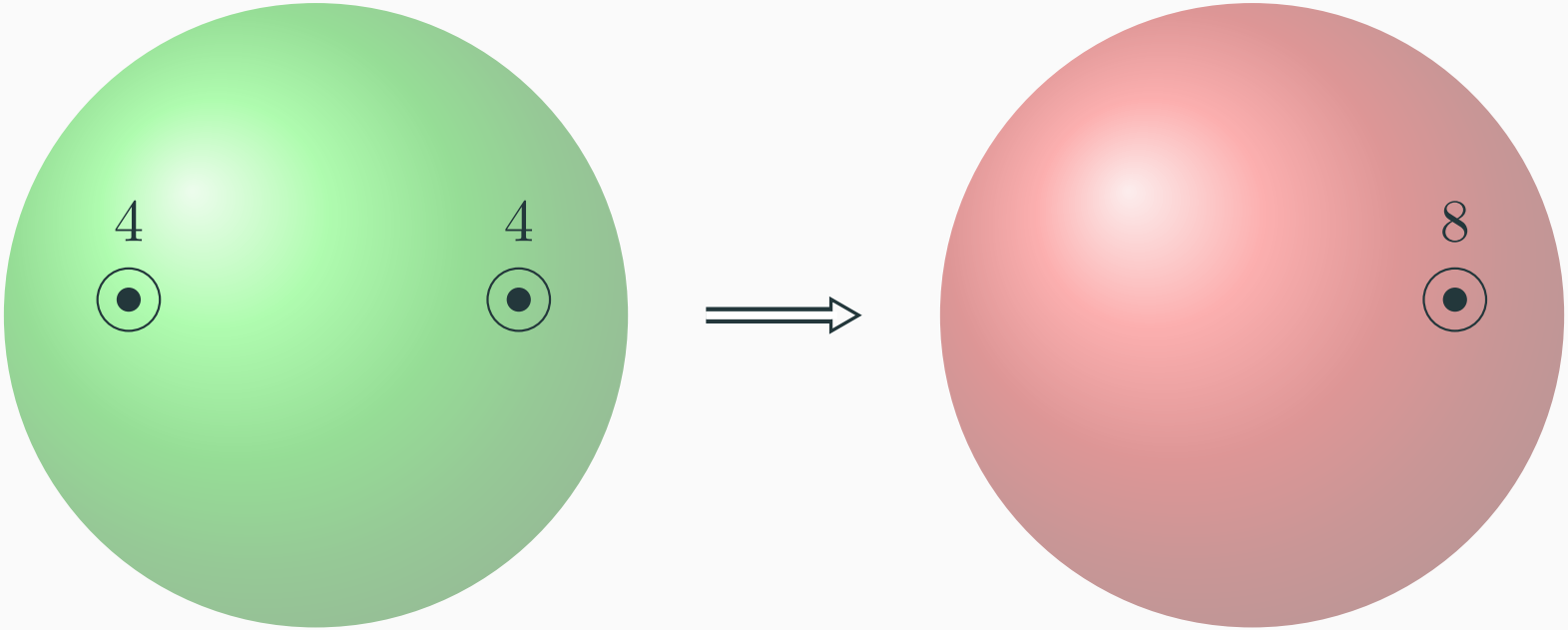

$\mathrm{N_f} = 2$ (first realization) $\mathrm{H_1}$ AD (first realization)

Some Details

(3) The τ-function of PIII′

The Painlevé III′ equation ($q = q(s)$)

$$\frac{\mathrm{d}^2 q}{\mathrm{d}s^2} = \frac{1}{q}\left(\frac{\mathrm{d}q}{\mathrm{d}s}\right)^2 - \frac{1}{s}\left(\frac{\mathrm{d}q}{\mathrm{d}s}\right) + \frac{q^2}{4\,s^2}(\gamma\,q + \alpha) + \frac{\beta}{4\,s} + \frac{\delta}{4\,q}$$

is a Hamiltonian system

$$\frac{\mathrm{d}q}{\mathrm{d}s} = \frac{\partial H_{\mathrm{III}'}}{\partial p}, \qquad \frac{\mathrm{d}p}{\mathrm{d}s} = -\frac{\partial H_{\mathrm{III}'}}{\partial q}$$

with a Hamiltonian

$$H_{\mathrm{III}'}(s) = \frac{1}{s}\left[q^2\,p^2 - (q^2 + v_2\,q - s)p + \frac{1}{2}(v_1 + v_2)q\right].$$

The parameters α, β, γ, and δ of PIII′ are fixed as

$$\alpha = -4\,v_1, \qquad \beta = 4(v_2 + 1), \qquad \gamma = 4, \qquad \delta = -4.$$

- The τ-function of PIII′ is defined by

$$H_{\mathrm{III}'}(s) = \frac{\mathrm{d}}{\mathrm{d}s} \log \tau(s).$$

Let

$$\sigma(s) := sH_{\mathrm{III}'}(s) = q^2\, p^2 - (q^2 + v_2\, q - s)p + \frac{1}{2}(v_1 + v_2) = s\frac{\mathrm{d}}{\mathrm{d}s} \log \tau(s).$$

This function satisfies the σ-form of PIII′:

$$(s\sigma'')^2 - 4(\sigma - s\sigma')\sigma'(\sigma' - 1) - \left(v_2\, \sigma' - \frac{1}{2}(v_1 + v_2)\right)^2 = 0.$$

Using [Forrester-Witte, math-ph/0201051], we can see that

$$\tau(s) = s^{(1/2)MN} Z_{U(N)}(M), \qquad s = \frac{1}{4g^2},$$

with

$$v_1 = M + N = -\frac{2m_1}{g_s}, \qquad v_2 = -M + N = -\frac{2m_2}{g_s}.$$

(4) alt dPII

- The unitary matrix model $Z_{U(N)}(M)$ can be solved by the method of orthogonal polynomials. When $M = 0$, the GWW model is studied by this method in [Periwal-Shevits, 1990].

- When $M = 0$,

$$Z_{U(N)}(0) = I_0(1/g)^N \prod_{j=1}^{N-1} (1 - R_j^2)^{N-j}.$$

Here $I_\nu(z)$ is the modified Bessel function of the first kind. R_n satisfies the discrete Painlevé II equation (dPII equation)

$$R_{n+1} + R_{n-1} = \frac{2n\, g\, R_n}{1 - R_n^2}.$$

• When $M \in \mathbb{Z}$, the results of [Periwal-Shevits] are generalized to

$$Z_{U(N)}(M) = (-1)^{MN} I_M(1/g)^N \prod_{j=1}^{N-1} (1 - A_j B_j)^{N-j}.$$

A_n and B_n satisfy the following system of recursion relations (string equations):

$$A_{n+1} + A_{n-1} = \frac{2n\, g\, A_n}{1 - A_n B_n}, \qquad B_{n+1} + B_{n-1} = \frac{2n\, g\, B_n}{1 - A_n B_n},$$

$$A_n B_{n+1} - A_{n+1} B_n = 2\, M\, g.$$

When $M \neq 0$, $A_n \neq B_n$. But when $M = 0$, we can set $A_n = B_n = R_n$ and these recursion relations reduces to the dPII equation.

Let

$$X_n(M) = \frac{A_{n+1}(M)}{A_n(M)}, \qquad Y_n(M) = \frac{B_{n+1}(M)}{B_n(M)}, \qquad (n \geq 0).$$

Then these variables satisfy the alt dPII equations:

$$\frac{(n+1)}{1 + X_n\, X_{n+1}} + \frac{n}{1 + X_n\, X_{n-1}} = \frac{1}{2\,g}\left(-X_n + \frac{1}{X_n}\right) + n - M,$$

$$\frac{(n+1)}{1 + Y_n\, Y_{n+1}} + \frac{n}{1 + Y_n\, Y_{n-1}} = \frac{1}{2\,g}\left(-Y_n + \frac{1}{Y_n}\right) + n + M.$$

(6) Double scaling limit

- The double scaling limit: $N \to \infty$, $S = Ng \to 1$ with

$$\kappa \equiv \frac{1}{N} \frac{1}{(1-S)^{(1/2)(2-\gamma_{\rm st})}}, \qquad (\gamma_{\rm st} = -1)$$

kept finite. Here $\gamma_{\rm st}$ is the susceptibility of the system.

- In the $N \to \infty$ limit, we assume that a discrete variable f_n turns into a continuous function

$$f_n \to f\left(\frac{n}{N}\right) \equiv f(x), \qquad x \equiv \frac{n}{N}, \qquad (0 \le x \le 1).$$

Let

$$a^3 \equiv \frac{1}{N}, \qquad S \equiv N\,g = 1 - c\,a^2, \qquad (c = \kappa^{-2/3}),$$

$$n\,g = \frac{n}{N} Ng = S\,x = 1 - \frac{1}{2}\,a^2 t, \qquad A_n\,B_n = a^2 u(t).$$

Then the string equations turns into the PII equation: [Flaschka-Newell, 1980]

$$u'' = \frac{(u')^2}{2\,u} + y^2 - \frac{1}{2}\,t\,u - \frac{M^2}{2\,u}.$$

Let $p_u \equiv -u'/u$. Then, this is equivalent to

$$u' = -p_u\,u, \qquad p_u' = \frac{1}{2}\,p_u^2 - u + \frac{1}{2}\,t + \frac{M^2}{2\,u^2}.$$

This is a Hamiltonian system

$$u' = \frac{\partial H_{\mathrm{II}}}{\partial p_u}, \qquad p_u' = -\frac{\partial H_{\mathrm{II}}}{\partial u},$$

with the Hamiltonian

$$H_{\mathrm{II}} = -\frac{1}{2}p_u^2\,u + \frac{1}{2}\,u^2 - \frac{1}{2}\,t\,u + \frac{M^2}{2\,u}.$$

By a canonical transformation

$$(u, p_u) \to (y, p_y); \qquad u = -p_y, \qquad p_u = y + \frac{M}{p_y},$$

the Hamiltonian becomes

$$H_{\mathrm{II}} = \frac{1}{2}\, p_y^2 + \frac{1}{2}(y^2 + t)p_y + M\, y.$$

This leads to

$$y' = p_y + \frac{1}{2}\, y^2 + \frac{1}{2}\, t, \qquad p_y' = -p_y\, y - M.$$

Then

$$y'' = \frac{1}{2}\, y^3 + \frac{1}{2} t\, y + \left(\frac{1}{2} - M\right).$$

By rescaling y and t, we get the standard form of PII equation:

$$y'' = 2\, y^3 + t\, y + \alpha, \qquad \alpha = \frac{1}{2} - M.$$

- Bäcklund transformations for PII are generated by s_1 and π:

$$s_1(y) = y + \frac{2M}{p_y}, \qquad \pi(y) = -y,$$

$$s_1(p_y) = p_y, \qquad \pi(p_y) = -p_y - y^2 - t,$$

$$s_1(M) = -M, \qquad \pi(M) = 1 - M.$$

- The translation $T = s_1\pi$.

$$T^n(M) = M + n, \qquad (n \in \mathbb{Z}).$$

Let $y_n(t) = T^n(y(t))$, $p_n(t) = T^n(p_y(t))$, $(n \in \mathbb{Z})$. Then they obey

$$y_{n+1} + y_n = -\frac{2(M+n)}{p_n}, \qquad p_n + p_{n-1} = -y_n^2 - t.$$

These leads to the alternate discrete Painlevé I equation (alt dPI):

$$\frac{2(M+n)}{y_{n+1} + y_n} + \frac{2(M+n-1)}{y_n + y_{n-1}} = y_n^2 + t.$$

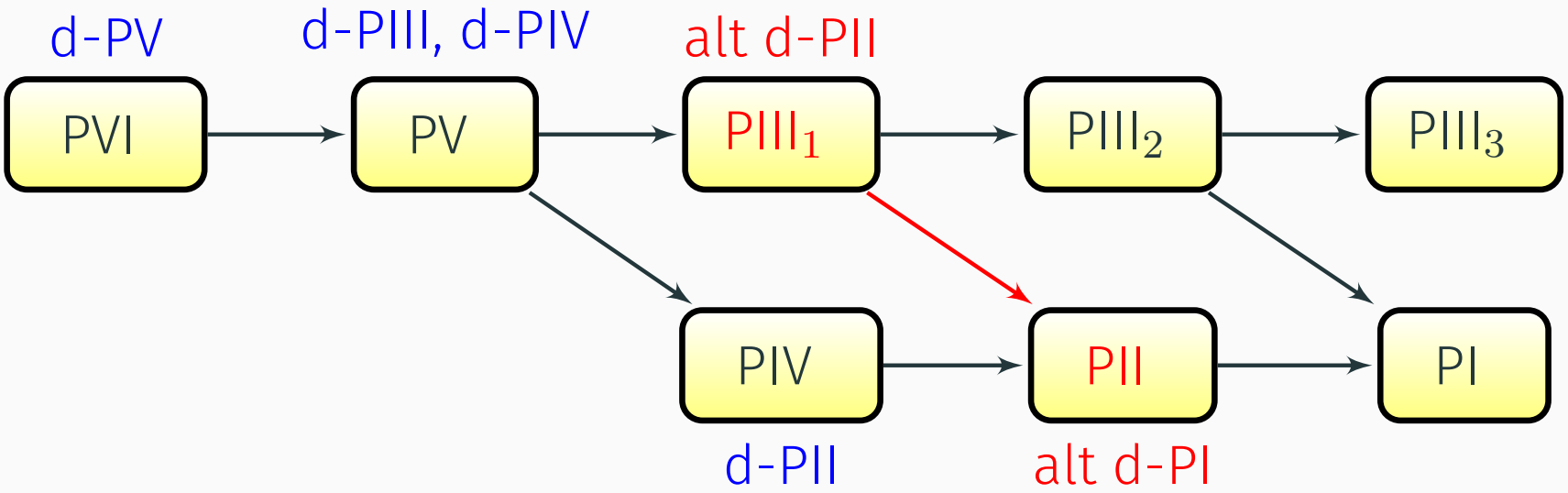
d-PV
d-PIII, d-PIV
alt d-PII
PVI
PV
PIII$_1$
PIII$_2$
PIII$_3$
PIV
PII
PI
d-PII
alt d-PI

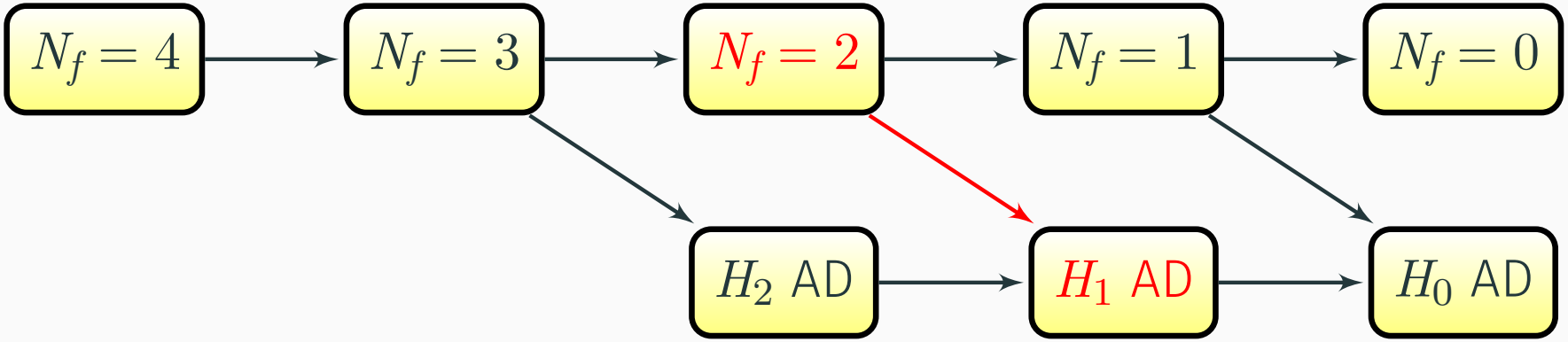
$N_f = 4$
$N_f = 3$
$N_f = 2$
$N_f = 1$
$N_f = 0$
H_2 AD
H_1 AD
H_0 AD